ECO NO.	DATE	REV.	REVISION RECORD	AUTH.	DR.BY
5459	2-6-2003	A	REMOVED P/N 48010 FOR MANUAL;PARTLIST; REMOVED 45356 DIPSTICK; ADDED 37833 RELAY,12VDC 40A; P/N 35435 WAS 36869, 24907 WAS 42616, 24906 WAS 40384.		GA
5527	4-9-2003	B	P/N 300236 WAS P/N 35435 QTY 3.0"		JCA
5542	4-22-2003	C	P/N 48291 WAS 46866; P/N 48293 WAS 46871 P/N 48294 WAS 46832		JCA
5574	6-20-2003	D	ADDED WATER TEMP SWITCH P/N 39550		JCA
5678	2-13-2004	E	P/N 46867 WAS 45867; P/N 46868 WAS 45868		GA
5801	8-5-04	F	P/N 49250 WAS 46704; 49402 WAS 46703		BM
6033	6-16-2005	G	P/N 45365 WAS 45343; 46872 WAS 46849; 46846 WAS 43846; 24906 WAS 24902.		GA
6330	4-9-2007	H	ADDED 53359 AND 53360.		GA
6602	2-20-2009	J	ADDED 3.0 BPMG-FW COOLED MODEL.		GA

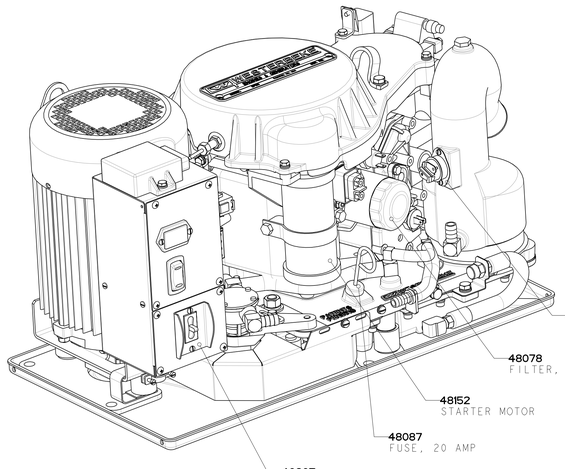

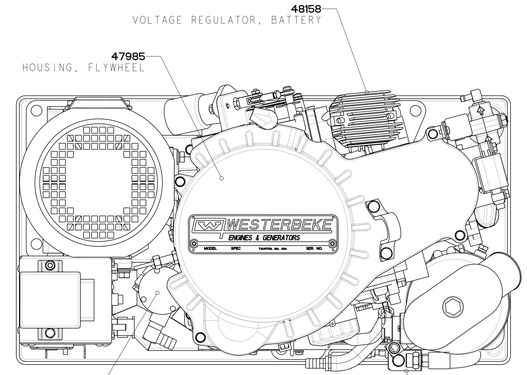

FAST MOVING PARTS

PART NO.	DESCRIPTION	PART NO.	DESCRIPTION	
43438	AIR FILTER / FLAME ARRESTOR	48009	MANUAL, OPERATOR	
46490	ACTUATOR, SPEED CONTROL	- - -	MANUAL, PARTLIST	(A)
46869	BELT, WATER PUMP	- - -	MANUAL, SERVICE	
46851	BELT, GENERATOR DRIVE	37323	OIL PRESSURE SWITCH	
48154	BELT, TIMING	48056	PANEL, REMOTE START/STOP	
45348	CARBURETOR	45354	PUMP, FUEL	
47828	DIPSTICK	46814	PUMP, SEA WATER	
32923	EXHAUST TEMPERATURE SWITCH	48065	PUMP, IMPELLER KIT (SW)	
47006	FILTER, FUEL - KIT	48066	PUMP, REPAIR KIT (SW)	
48078	FILTER, LUBE OIL	48082	SPARE PARTS KIT A	
48072	FUSE, 10 AMP	48083	SPARE PARTS KIT B	
48087	FUSE, 20 AMP	45352	SPARKPLUG (2)	
48081	GASKET SET, COMPLETE	47834	SPRING, BELT TENSIONER	
- - -	GASKET SET, UPPER	48152	STARTER MOTOR	
48153	GASKET, HEAD	48155	STARTER SOLENOID	
47992	GASKET, OIL SUMP PLATE	47202	SWITCH, START / STOP	
47821	GASKET, OIL PAN	48157	THERMOSTAT	
42388	HOURMETER	48150	THERMOSTAT MOUNTING GASKET	
45350	IGNITION COIL	48158	VOLTAGE REGULATOR, BATTERY	
45351	IGNITION CONTROL MODULE	48070	WATER INJECTED EXHAUST ELBOW	
46272	ISOLATOR	39550	WATER TEMPERATURE SWITCH	(D)
48057	MAGNETIC PICKUP	48071	ZINC, ANODE W/ GASKET	

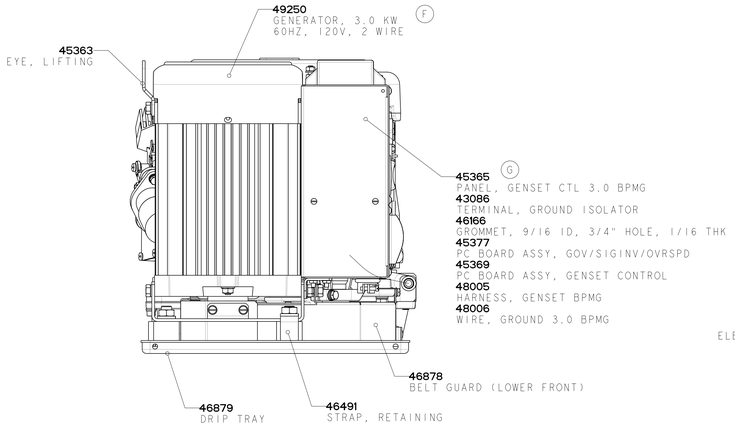

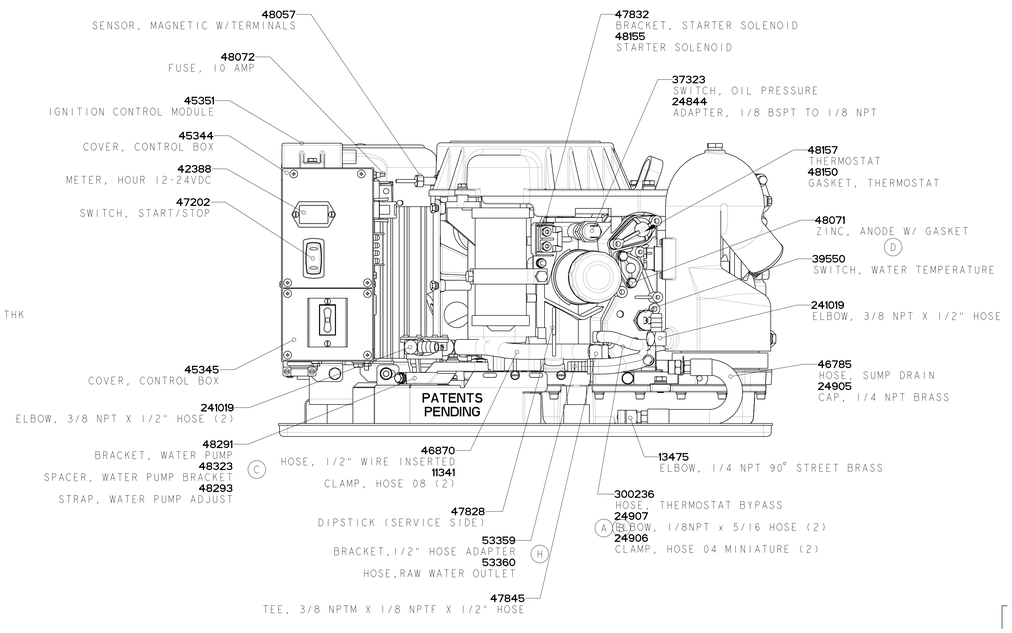

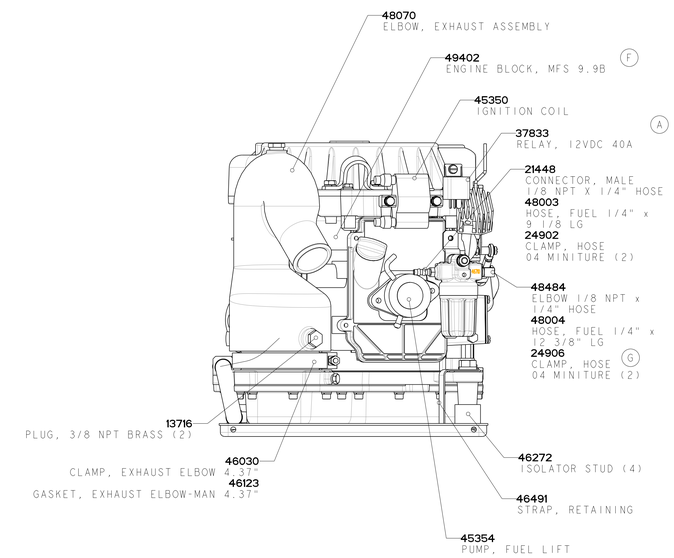

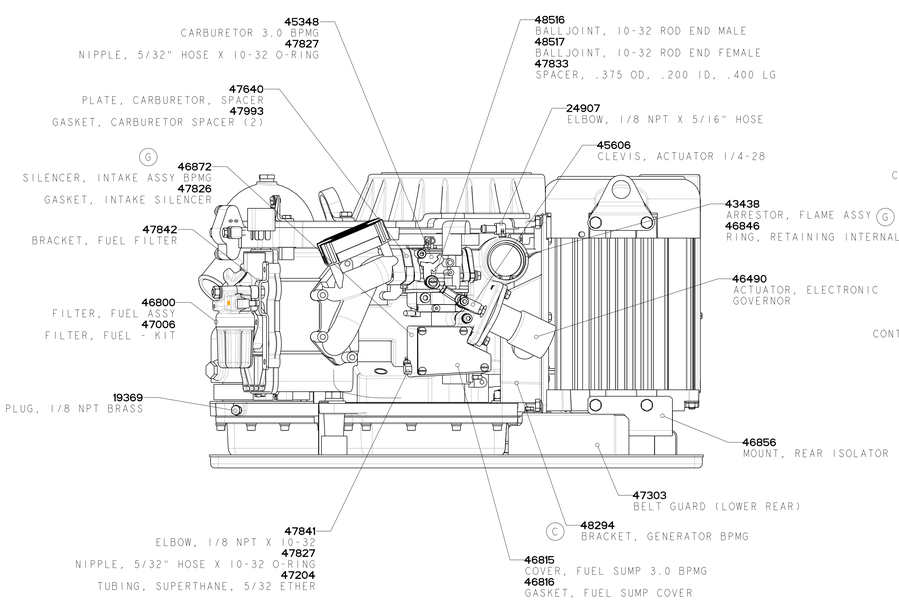

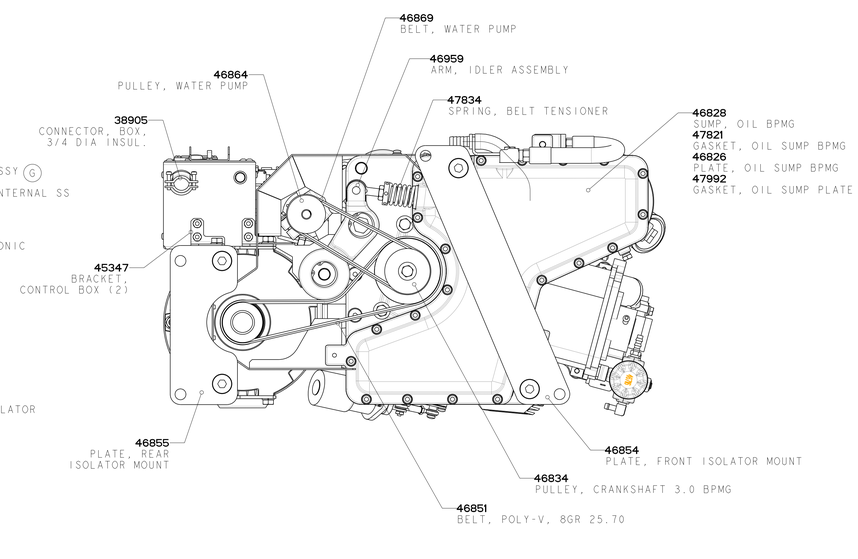

3.0 BPMG FW COOLED

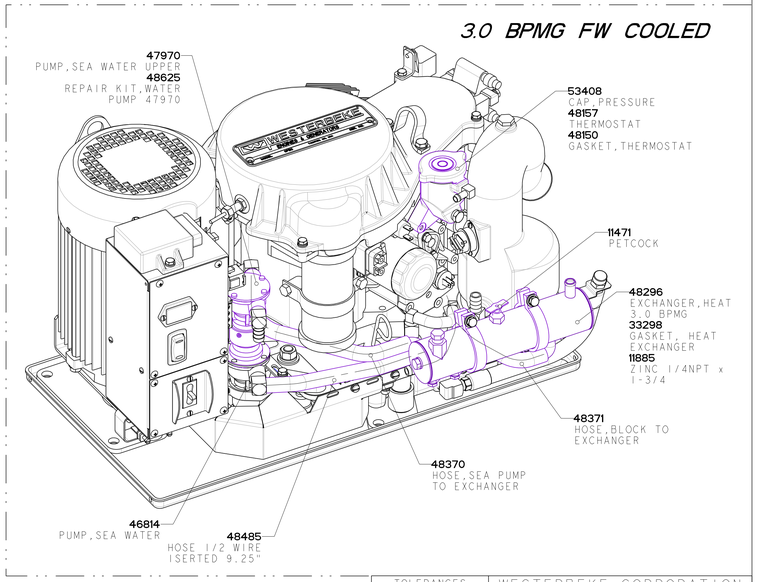

TOLERANCES (UNLESS OTHERWISE NOTED)	WESTERBEKE CORPORATION TAUNTON, MA. 02780		
INCHES / MILLIMETERS: .XX ±.02 / X ± 1.0; .XXX ±.005 / .X ± .5; CAST ±.03 / .XX ± .13; ANGLES: ±0°; FINISH 63	TITLE: DGPARTS 3.0 BPMG, 3.0 BPMG-FW COOLED		
DIMENSIONS INCHES / MILLIMETERS (WHEN APPLICABLE)	DRAWN BY: Jeremy Anderson	DATE: 17/Dec/02	MATERIAL: ---
	APPROVED BY	DATE	---
	SCALE 0.350	SIZE: E	DRAWING NUMBER: 48017
	SHT. 1 of 1		REV. J